Industrial Emissions Directive - Information sheet #2
Examples of installation facilities & capacities

This information sheet supports the process of identifying 'newly prescribed' activities. It covers those waste operations that are to be permitted as installations for the first time. It follows the implementation of the Industrial Emissions Directive (IED) by the amendment of the Environmental Permitting Regulations 2010 (EPR).

Information sheet #2 provides some examples of facilities by reference to the activities taking place and works through examples of how 'capacity' is calculated. The capacity of a facility will define whether it is above the threshold for being defined as a newly prescribed activity and therefore need to be permitted as an installation.

These are only generic examples to guide individual site assessments. Operators should not base significant financial decisions on this overview. Operators uncertain of the issues should seek advice on this complex matter, either from their Area Compliance Officer or an independent professional consultant.

Defining factors

Is your waste facility affected by IED?

EPR identifies installations by reference to a list of activity descriptions in Part 2 to Schedule 1 to the Regulations. Information sheet #1 outlines the criteria for being a 'newly prescribed' activity and describes the process that operators should follow if their newly prescribed activities must now be permitted as installations.

To identify whether their activities fall within the description of a newly prescribed activity it is recommended that operators firstly prepare a schematic of the activities at their site, especially for more complex facilities. These activities should then be identified as either a disposal (D) or a recovery (R) operation as set out in Annex I and II of the rWFD. These annexes are reproduced at the end of this document. Operators should look closely at each of the steps in the treatment process to identify D and R operations. The D and R codes can then be related to the activity descriptions within Schedule 1 to the EPR. Working through the exercise of establishing an operational flow diagram and assigning D and R codes makes identification of 'newly prescribed activities' much easier.

A regulated waste management facility may undertake a number of Waste Framework Directive Annex I and II operations, some of which may already be 'listed activities', some may be 'newly prescribed activities', and some may not be listed activities at all. It is therefore important to break down the activities at the facility into:

1. the disposal or recovery operations taking place
2. the capacities of those operations to dispose / recover non-hazardous or hazardous waste
3. the types and numbers of listed activities

It is important to note that:

- A waste management facility may undertake a number of recovery and disposal operations The 'primary purpose' of each operation must be determined on a case by case basis, not the perceived purpose of the waste management facility.
- Annex I and II operations are indicative and not intended to be exhaustive.
- Operations undertaken which may lead to resource recovery, recycling reclamation, direct re-use or alternative use, are generally recovery operations.
- A recovery operation can result in a major proportion of residues being consigned to a disposal operation e.g. silver recovery from photographic wastes
- Where wastes are being re-used in a treatment operation and all of the materials are being subsequently disposed of, the operation shall be considered to be a disposal operation.

Further guidance on interpretation on whether a waste management operation is a 'listed activity' can be found in *Regulatory Guidance Series No.2 – Understanding the meaning of regulated facility Version 3, April 2013*

Capacities of facilities

Activity descriptions typically include a capacity threshold above which the activity becomes an installation. If the activity descriptions don't include a capacity threshold all activities within the description are regulated as installations.

For waste activities these capacity thresholds are defined as a tonnage throughput per day for treatment activities or a maximum capacity for storage activities. Reference to a capacity means the maximum rate at which the installation is capable of operating. Capacities of separate activities falling within the same description, where they are carried out perhaps by different operators at the same site should be aggregated or added together to see if those activities together have a capacity above a threshold. If they do, there is a listed activity in its own right. Information sheet #1 provides more information on the factors to consider.

Changes to aggregation rules

Previously, when defining an installation, the consideration of the capacity of a facility included the amount of waste each specific activity was able to process. For example, when confirming the extent of an activity to treat non-hazardous waste for the purpose of disposal, the consideration of the 50 tonne per day threshold would have looked at the actual capacity of physical – chemical treatment processes or biological processes separately (i.e. what was 5.3 A(1) c) (i) and 5.3 A(1) c) (ii) activities were considered separately). Thus, if a particular facility had both physical – chemical and biological treatment processes each below the 50 tonne threshold then neither were permitted as installations.

The revised definitions of installation activities now place this capacity consideration at a higher level by taking the following approach within the activity definitions:

> *Section 5.4 A(1) a) Disposal of non-hazardous waste with a capacity exceeding 50 tonnes per day ... <u>involving one or more of the following activities</u>:*
>
> *(i) biological treatment;*
>
> *(ii) physico-chemical treatment;*

Thus, that same facility as the example above, with the same throughputs, when now assessed against the post IED description for their activities would be considered an installation, as the 50 tonne per day threshold is breached when both activities are aggregated together.

Key concepts in assessing the activities carried out at a site and in determining how and where IED applies are those of the Stationary Technical Unit (STU), Directly Associated Activities (DAAs) and Installation Boundary.

Further guidance on these points is available in our RGN2 publication (see link above); the examples that follow demonstrate the process to be followed in identifying the activities carried out, and the location of those activities – effectively identifying the STU. The latter examples touch upon the relationship of DAAs to the STU; which together form the activities carried out within the Installation Boundary.

Case Studies – biowaste treatment

Example 1 Simplified mechanical biological treatment prior to landfill

The process shown in Figure 1 below, is a simplified MBT operation.

As well as a physico-chemical treatment (pulveriser / trommel) for recovery there is a biological treatment operation (D8) in the final anaerobic /aerobic treatment process. In this example, the final biological treatment step is used solely to reduce the biodegradability (typically measured by the BMc or DR4 test) and volume of waste disposed of to landfill.

Figure 1 Simplified mechanical biological treatment prior to landfill

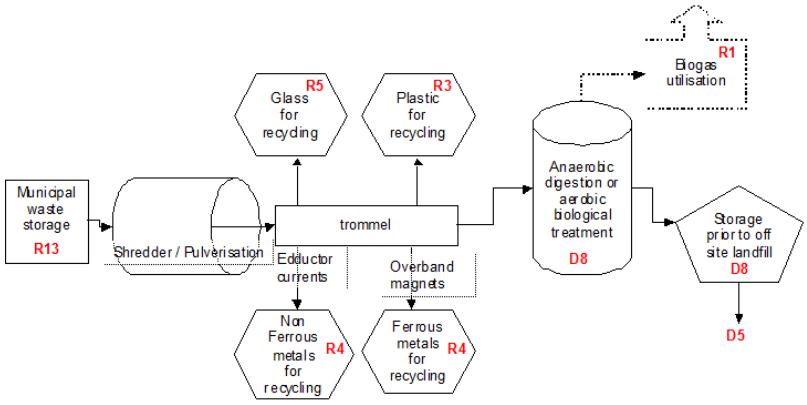

If the aerobic treatment process has a capacity greater than 50 tonnes of non-hazardous waste (threshold for anaerobic treatment is 100 tonnes) then the biological treatment process is a newly prescribed activity under Section 5.4 Part A(1) a) (i). This is because the purpose of this part of the process is to treat waste for subsequent disposal to landfill. Therefore, the additional requirements of an installation apply to this D8 activity. If the biological treatment process has a capacity less than these thresholds then it would be permitted as a waste operation.

If the biological treatment process is a Part A(1) D8 activity, you should consider whether it is technically connected to the rest of the process (i.e. to the waste storage / shredder / trommel activities). Establish whether it is all a continuous process and there are no storage step before or after the biological treatment. If so, you can consider the pre-treatment and post-recovery steps to be 'directly associated activities' and they are permitted as part of the installation.

Example 2 Simplified mechanical heat treatment

The process shown in Figure 2, depicts a simplified mechanical heat treatment process where municipal waste is pulverised or shredded and then heated in an autoclave or a bio-drier prior to separation or extraction of recyclable elements. Heat is not derived from degradation of organics.

Figure 2 Mechanical heat treatment for recovery of recyclates

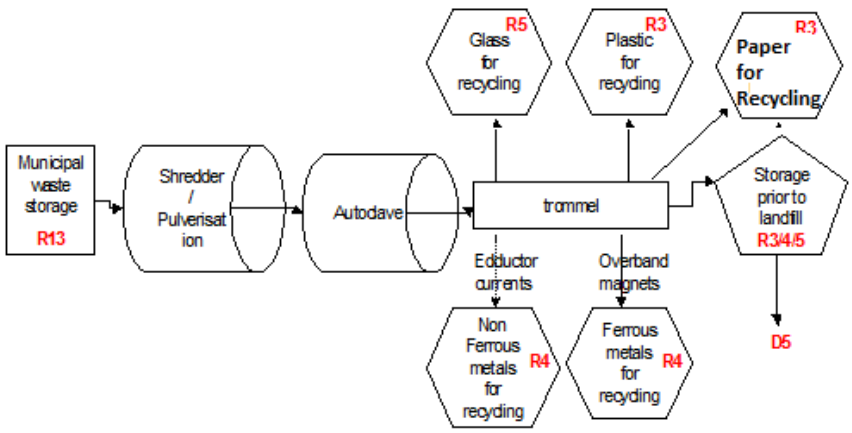

The purpose of the autoclave is to enhance the subsequent separation of the recoverable materials in the waste. A trommel and other separation equipment are used to separate out the glass, paper, plastic, ferrous and non-ferrous metals. The remaining non-recyclable waste is stored prior to disposal to landfill off-site.

All the processing steps (shredder / pulveriser / autoclave / trommel) are physico-chemical treatment processes and are for the purpose of materials recovery in this example, even though some waste is disposed of to landfill. Note there is only physico-chemical treatment for recovery (R3 / R4 / R5) operations and no biological treatment for disposal (D8) or physico-chemical treatment for disposal (D9) operations. The definitions within Schedule 1 do not include physico-chemical treatment for recovery as an activity. *This treatment facility is not subject to Part A(1) activities, is not a newly prescribed activity and the whole process would be permitted as a waste operation*.

Note that this is still the case if the majority of the waste fed into the process is disposed of to landfill. The intention of the treatment process is to recover glass, paper, plastics and metals, with the residues being landfilled so the overall treatment process is considered recovery.

Example 3 Simplified mechanical biological treatment prior to recovery

The process shown in Figure 3 below, is another simplified MBT operation.

As well as a physico-chemical treatment (pulveriser / trommel) for recovery process there is a biological treatment operation (R3) in the final anaerobic / aerobic treatment process. In this example, the final biological treatment step is used to reduce the biodegradability (stabilise / sanitise the waste) which may then go to be used as a compost like output (CLO) or for less stabilised shorter treatment may go on to be a RDF.

Figure 3 Simplified mechanical biological treatment prior to recovery

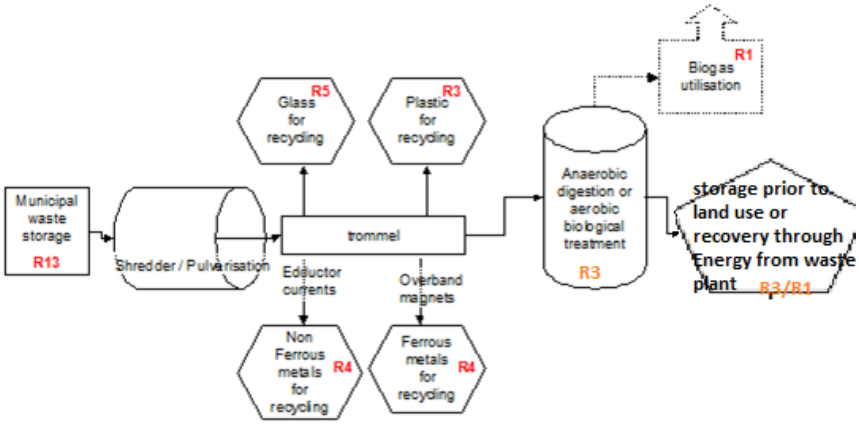

Should final product go on to RDF it is noted the reduction in biodegradability is the intention of the process therefore a biological treatment activity description is more apt than a pre-treatment for incineration description.

If the aerobic treatment process has a capacity greater than 75 tonnes of non-hazardous waste (threshold for anaerobic treatment is 100 tonnes) then the biological treatment process is a newly prescribed activity under Section 5.4 Part A(1) b) (i). This is because the purpose of this part of the process is to treat waste for recovery. Therefore, the additional requirements of an installation apply to this R3 activity. If the biological treatment process has a capacity less than these thresholds then it would be permitted as a waste operation.

If the biological treatment process is a Part A(1) R3 activity, you should consider whether it is technically connected to the rest of the process (i.e. to the waste storage / shredder / trommel activities). Establish whether it is all a continuous process and there are no storage step before or after the biological treatment. If so, you can consider the pre-treatment and post-recovery steps to be 'directly associated activities' and they are permitted as part of the installation .

Example 4 Simplified mechanical biological treatment for recyclate recovery

The process is another simplified MBT facility. However, the biological treatment step is firstly facilitating the subsequent efficient separation of recoverable materials and is therefore also considered to be a recovery activity.

If the aerobic treatment process has a capacity greater than 75 tonnes of non-hazardous waste (threshold for anaerobic treatment is 100 tonnes) then the biological treatment process is a newly prescribed activity under Section 5.4 Part A(1) b) (i). This is because the purpose of this part of the process is to treat waste for recovery. Therefore, the additional requirements of an installation apply to this R3 activity. If the biological treatment process has a capacity less than these thresholds then it would be permitted as a waste operation.

Figure 4 Simplified mechanical biological treatment for recyclate recovery

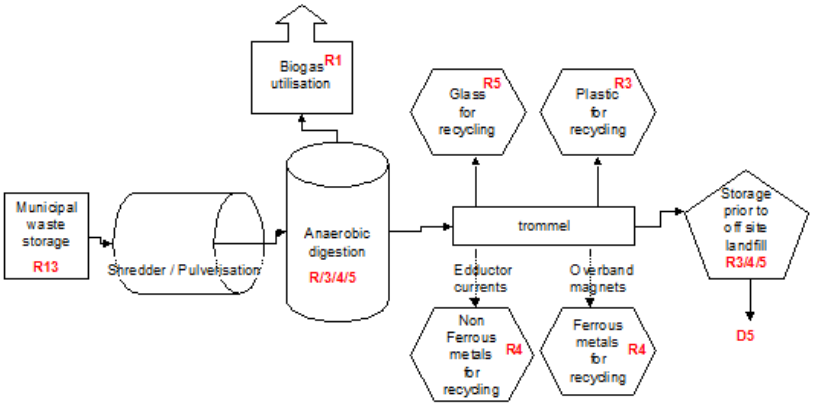

If the biological treatment process is a Part A(1) R3 activity, you should consider whether it is technically connected to the rest of the process (i.e. to the waste storage / shredder / trommel activities). Establish whether it is all a continuous process and there are no storage step before or after the biological treatment. If so, you can consider the pre-treatment and post-recovery steps to be 'directly associated activities' and they are permitted as part of the installation .

Example 5 Thermal digestion facility

The process layout of a thermal anaerobic digestion process involving both mesophillic and thermophillic treatment processes is presented in Figure 5, both of which have the potential to be above the threshold for a 5.4 A(1) b) (i) activities – a biological treatment operation (R3)

After initial picking to remove undesirable material, waste inputs are shredded & blended with a carrier fluid before introduction to mesophillic and thermophillic treatment processes (ATAD) to break down the feed material. The partially treated material is then either directed to recovery outlets or fed into anaerobic digesters to produce a more stable product and improve gas conversion rates Outputs from the process are recovered to land

Figure 5 ATAD & AD Processes

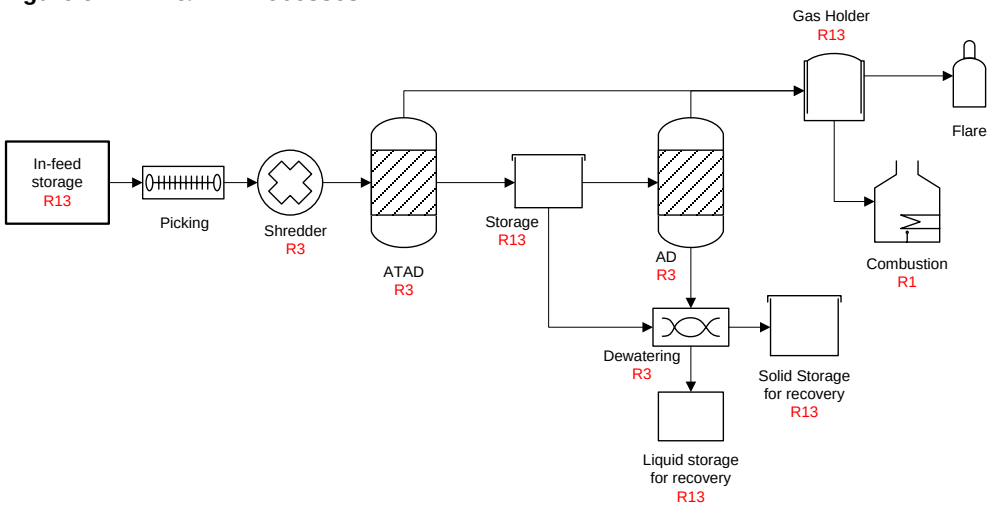

For the ATAD there are 14 tanks @ 50 tonnes per tank – the maximum treatment capacity is 700 tonnes. Residence time is 3 days so the daily capacity of the ATAD is 700 ÷ 3 = 233 tonnes per day. The interim storage between ATAD & AD is in 5 product tanks for either off site recovery or for further treatment in the AD plant.

The AD process holds 4,000 tonnes of waste with a designed retention time of 90 days. The daily capacity is 44.5 tonnes per day. The AD process is technically connected to the ATAD. *Those two units define what may be an installation. As more than just anaerobic digestion processes are being operated the relevant threshold for 5.4 A(1) b) activities is 75 tonnes per day. With the ATAD process capacity at 233 tonnes per day this would be a new installation activity.*

Input storage , manual picking and storage for disposal may all be considered DAA's if we follow rule 2.14 in RGN2 as these are activities are all connected to enable the stages of biological treatment.

Example 6 Aerobic Composting facility

Much more common amongst waste treatment activities are aerobic treatment sites processing biodegradable waste in open windrows and have the typical process flows outlined in Figure 6.

Received wastes are shredded and placed in windrows for a period of time. The windrows are turned over periodically until treatment standards have been achieved. The material may then be screened before a final maturation stage prior to use

Figure 6 Aerobic composting

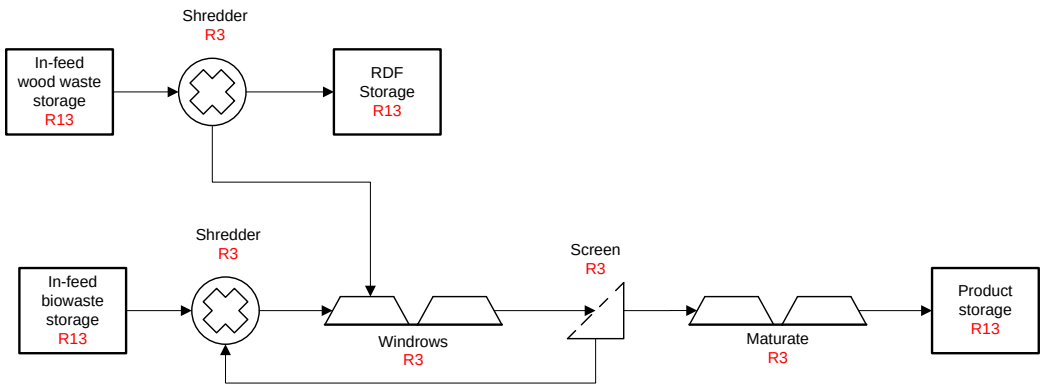

The area available to carry out the treatment process and the size of the windrows are important factors in determining whether this activity is above the threshold for a new Installation activity. The time it takes to achieve the desirable treated standard will change throughout the year so the capacity of the facility is calculated by reference to the maximum amount of material handled at any one time divided by the minimum number of days or parts of days over which treatment takes place.

If for example the windrows had a base width of 6m, a height of 3m, and the width across the top of 2m, the cross sectional area would be 12m^2. With a length of 30m each windrow holds 360m^3 of material. With a density of 0.4 t/m^3 each windrow contains 144 tonnes. The current operation may have 10 windrows of waste at various stages in the treatment process which could process 1,440 tonnes at any one time. Residence time for that material in the process may be 56 days giving a daily capacity of 25 tonnes per day. The operation in that format is below the threshold for a 5.4 A(1) b) (i) activity. However, if the pad on which the composting takes place were large enough to hold 40 windrows, the maximum rate at which the facility *could* operate is 100 tonnes per day which is above the threshold for a 5.4 A(1) b) (i) activity. Likewise, if the residence time in the summer period reduced to 28 days, the daily capacity would increase and affect the status of the facility in terms of being considered an installation and a newly prescribed waste activity.

The calculation of daily capacity must use the maximum quantity of waste the facility could treat at any one time divided by the minimum retention time, not necessarily limited to the amount of material it does treat. Without physical or legal restrictions on that process, this example, with a pad physically able to support 40 windrows would be considered a newly prescribed waste activity. If the operator wished to consider physical restrictions to the area he can treat waste on by using push walls or other physical barriers that could contain the treatment process to a section of the concrete pad. Alternatives include legal restrictions either in the management system or the permit itself to limit the daily capacity.

It remains the operator's responsibility to have the correct type of permit for the treatment facility he operates.

Case Studies: Pre-treatment for Incineration

Example 7 Simple materials recovery facility

A simplified MRF recovering recyclables from a waste stream before the residue is sent for combustion

As well as a physico-chemical treatment (pulveriser / shredder), a trommel and other separation equipment are used to separate out the glass, paper, plastic, ferrous and non-ferrous metals prior to compaction / baling of the residual non-recyclable element to ease its transportation to a combustion process

Figure 7 Simple materials recycling facility

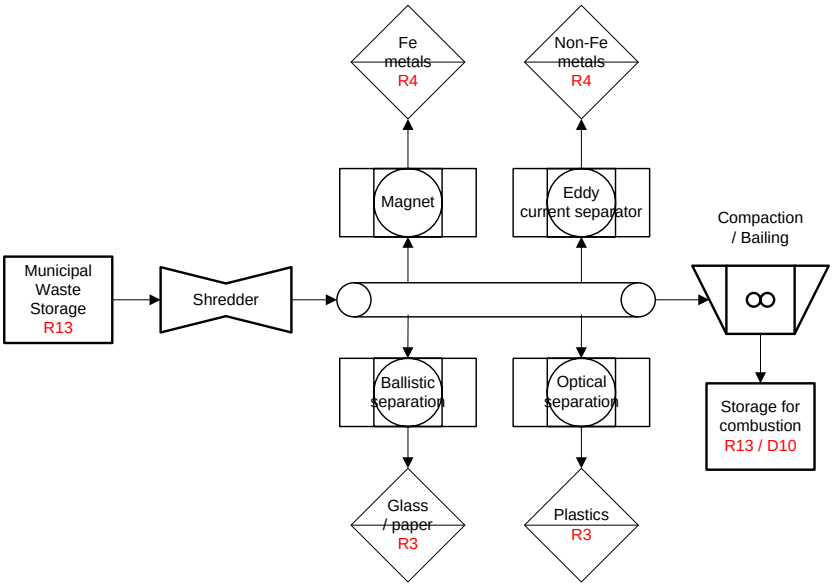

All the processing steps (shredder / pulveriser) are physico-chemical treatment processes and are for the purpose of materials recovery in this example, even though some waste may be disposed / recovered of by incineration. Note there is only physico-chemical treatment for recovery (R3 / R4 / R5) operations and no physico-chemical treatment for disposal (D9) operations. The definitions within Schedule 1 do not include physico-chemical treatment for recovery as an activity. *This treatment facility is not subject to Part A(1) activities, is not a newly prescribed activity and the whole process would be permitted as a waste operation*.

Note that this is still the case if the majority of the waste fed into the process is combusted. The intention of the treatment process is to recover glass, paper, plastics and metals, with the resides being incinerated so the overall treatment process is considered recovery.

Example 8 Materials recovery producing a fuel for combustion

A more complex MRF recovering recyclables from a waste stream before the residue is processed further before being sent for combustion is shown in Figure 8

Figure 8 Materials recovery producing a fuel for combustion

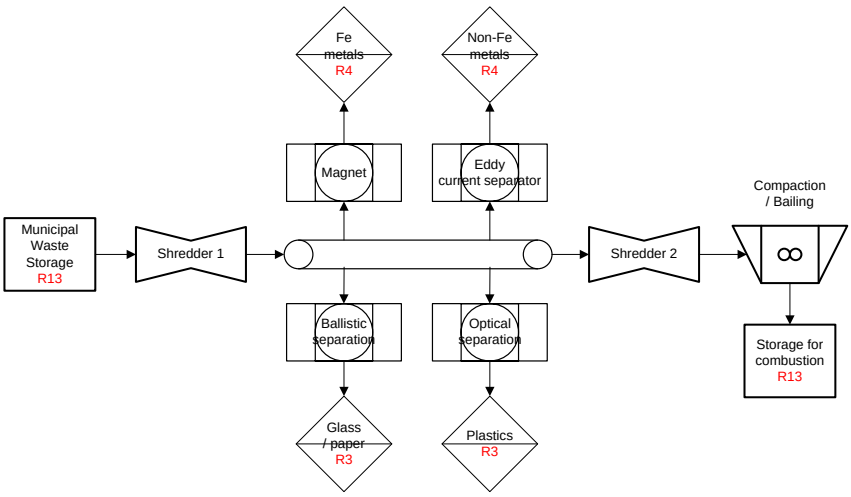

As well as a physico-chemical treatment (pulveriser / shredder), a trommel and other separation equipment are used to separate out the glass, paper, plastic, ferrous and non-ferrous metals. Residual non-recyclable materials are then passed through a second shredding / size adjustment process before being bailed / compacted and sent on to a combustion process. In this case the second shredding / size adjustment process is included to produce a better quality material for the combustion process, perhaps meeting a particle size and moisture content specification at the incinerator and not just to ease the transportation of the material.

The initial processing steps (shredder 1) is a physico-chemical treatment processes and is for the purpose of recovering the recyclable materials in this example, even though some waste may ultimately be disposed or recovered by incineration. Note this initial shredding process is only a physico-chemical treatment for recovery operation (R3 / R4 / R5) and does not physico-chemical treatment for disposal (D9) operations.

The secondary shredder is however treating the non-recyclable element that is going on for combustion. It is undertaken to achieve a particular specification or a higher quality standard that may be defined by the incineration process. This, for example, is likely to achieve a higher gate fee at the incinerator than un-shredded non-recyclable material discussed in Example 7 above.

If the secondary shredder has a capacity greater than 75 tonnes of non-hazardous waste per day then that element of the process is a newly prescribed activity under Section 5.4 A(1) b) (ii). This threshold reduces to 50 tonnes per day if the outlet for the combustible product doesn't have R1 status and the activity changes to 5.4 A(1) a) (iii).

The additional requirements of an installation apply to that particular element of the activity – the shredding process. Any bailing / compaction process will not necessarily be a scheduled activity in their own right, particularly if they are undertaken purely to ease the transportation of the material.

If the treatment process used to meet the product specification has a capacity less than these thresholds then the whole process would be permitted as a waste operation.

If the secondary shredder is a Part A(1) activity, you should consider whether it is technically connected to the rest of the process (i.e. to the waste storage / shredder / trommel / separation activities). Establish whether it is all a continuous process and there are no storage step before the final shredding process. If so, you can consider the pre-treatment and post-recovery steps to be 'directly associated activities' and they are permitted as part of the installation.

Case Studies: Treatment in shredders of metal waste

Example 9 Complex metal shredding operations

The process shown in Figure 9 encompasses the types of activity that may be shredding more than 75 tonnes per day of non-hazardous metal waste for the purpose of recovery, including waste electrical and electronic equipment (WEEE) and end-of-life vehicles and their components. Metal waste operations are unlikely to be shredding waste for the purpose of disposal.

Figure 9 Complex metal shredding operations

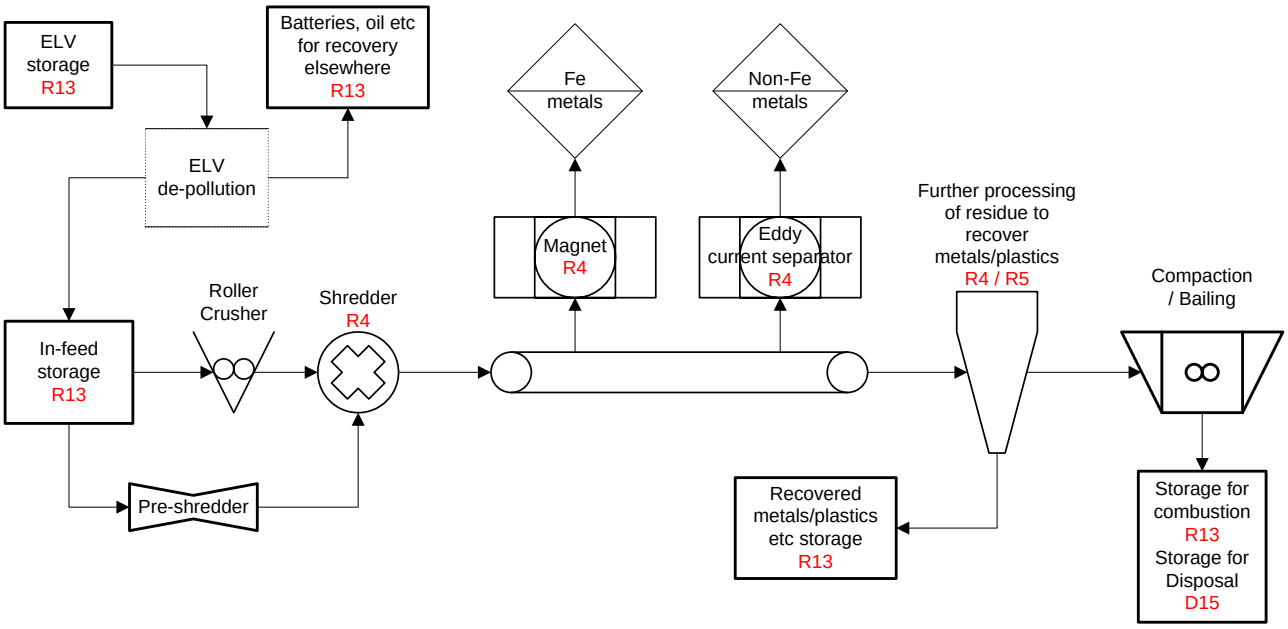

End-of-life vehicles must be de-polluted before they are shredded. The removal of hazardous components and materials from ELVs is a hazardous waste treatment process but the usual manual processes of depolluting and dismantling are not considered to be physico-chemical treatment under IED. This activity is not listed. It follows that the storage of ELVs pending depollution and dismantling is not a schedule 5.6 activity either.

In this scenario the shredder is the stationary technical unit (STU) along with feed conveyors and flattening rollers. Any storage of material immediately prior to being loaded into the shredder may also form part of the STU but longer term stockpiling of metal feed stocks will probably be a directly associated activity (DAA) as will the pre-shredder. The various separation processes that follow on from the shredding operation as a matter of course are also DAAs together with output storage.

Further processing of the light fraction may also be a DAA in some cases. In this scenario, because it follows on from the previous process as a matter of course it is likely to be. However stockpiling of the material before further processing may be sufficient to break the technical connection in which case it wouldn't be.

If any residue is burnt for energy recovery this will be considered a waste combustion activity. The further processing which gives rise to this material could be a listed activity under section 5.4 (pre-treatment of waste for incineration or co-incineration) if any step in that process is specifically for this purpose. However, if all the additional processing is carried out to recover more metal and/or plastic it won't be even if the residue is to be burned. Although the ELVs entering the site are added to the infeed stockpile once they are depolluted, the depollution process is not a DAA to the shredder. This is because the ELV depollution process does not 'serve' the shredder – the ELV process could still take place even if the shredder were not there.

Other scrap storage / processing with no association or technical connection to shredding operation remain waste operations

Appendix 1 - Disposal and Recovery Operations

Disposal Operations		**Recovery Operations**	
D1	Deposit into or onto land (e.g. landfill)	R1	Use principally as a fuel or other means to generate energy
D2	Land treatment	R2	Solvent reclamation/ regeneration
D3	Deep injection	R3	Recycling/reclamation or organic substances which are not used as solvents (including composting and other biological transformation processes
D4	Surface impoundment		
D5	Specially engineered landfill		
D6	Release into water body except seas and oceans	R4	Recycling/reclamation of metals and metal compounds
D7	Release into seas/oceans including sea-bed insertion	R5	Recycling/reclamation of other inorganic materials (***)
D8	Biological treatment which results in final compounds or mixtures which are discarded by means of any of the operations D1 to D12.	R6	Regeneration of acids or bases
D9	Physico-chemical treatment which results in final compounds or mixtures which are discarded by means of any of the operations D1 to D12.	R7	Recovery of components used for pollution abatement
D10	Incineration on land	R8	Recovery of components from catalysts
D11	Incineration at sea	R9	Oil re-refining or other reuses of oil
D12	Permanent storage	R10	Land treatment resulting in benefit to agriculture or ecological improvement
D13	Blending or mixing prior to submission to any operations D1 to D12	R11	Use of wastes obtained from any operation R1 to R10
D14	Repackaging prior to submission to any operations D1 to D12	R12	Exchange of wastes for submission to any of the operations R1 to R11(****)
D15	Storage pending any other disposal operation (excluding temporary storage, pending collection, on the site where it is produced).	R13	Storage of wastes pending any of the operations R1 to R12 (including temporary storage, pending collection, on the site where it is produced.

(***) This includes soil cleaning resulting in recovery of the soil and recycling of inorganic construction materials.

(****) If there is no other R code appropriate, this can include preliminary operations prior to recovery including pre-processing such as, inter alia, dismantling, sorting, crushing, compacting, pelletising, drying, shredding, conditioning, repackaging, separating, blending or mixing prior to submission to any of the operations numbered R1 to R11.